# Undercounter Basin

# BA020154E

## SPECIFICATIONS

510*360*180mm

With internal overflow

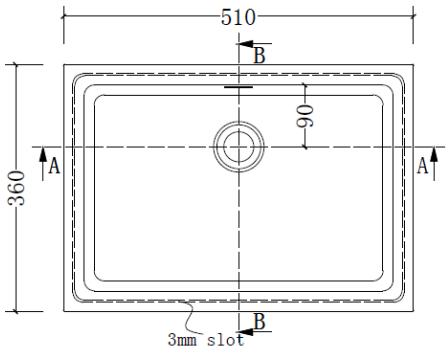


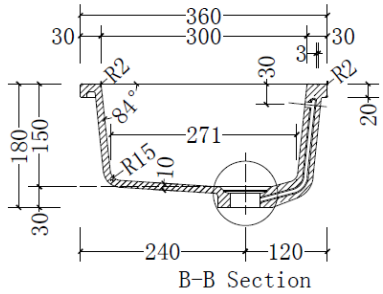


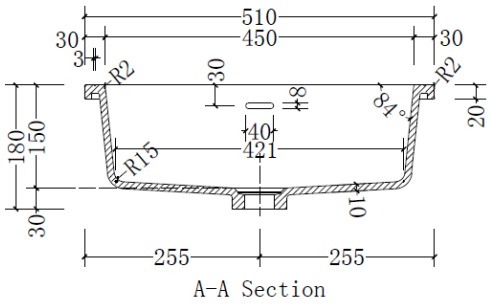


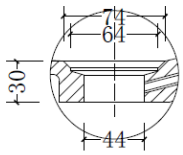


*Dimensional tolerances are applied to meet design requirements and tailor-made needs for customers.
*All dimensions are subject to the final mutually approved document.